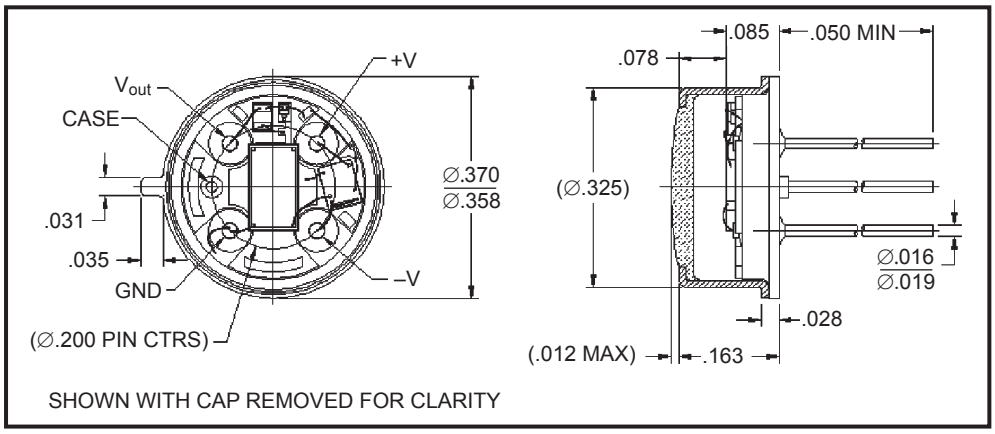

FEATURES

- Large active area
- Low noise
- High sensitivity
- Custom gains available
- Hermetically sealed TO-39
- Blue enhanced detector

RoHS

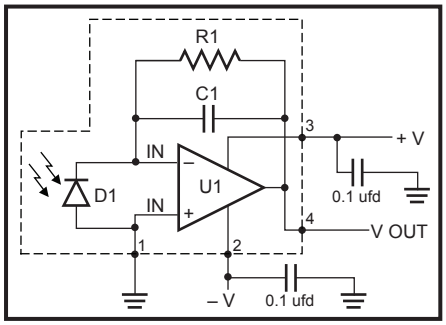

ELECTRO-OPTICAL CHARACTERISTICS AT 23°C

PARAMETERS	TEST CONDITIONS	MIN	TYP	MAX	UNITS
Dark Offset	$V_s = \pm 5$ V		1.2	± 2	mV
Dark Offset Noise	$V_s = \pm 5$ BW = 0.1 to 1000 Hz		198	250	μV rms
Sensitivity	$V_s = \pm 5$ V λ = 450 nm	20	28		V/μW
Frequency Response (-3 db)	$V_s = \pm 5$ V λ = 940 nm	900	1000		Hz
NEP	λ = 940 nm		0.08		pW/√Hz
Transimpedence Gain			100		MΩ
Supply Current			850	950	μA

THERMAL PARAMETERS

Voltage Supplies	± 5 to ± 15V
Power Dissipation	30 mW
Storage and Operating Temperature	–25° to +100° C
Soldering Temperature (1/16" from case for 3 secconds max)	+260° C

OPTO DIODE CORP.
750 Mitchell Road, Newbury Park, California 91320
Phone: (805) 499-0335, Fax: (805) 499-8108
Email: sales@optodiode.com, Website: www.optodiode.com

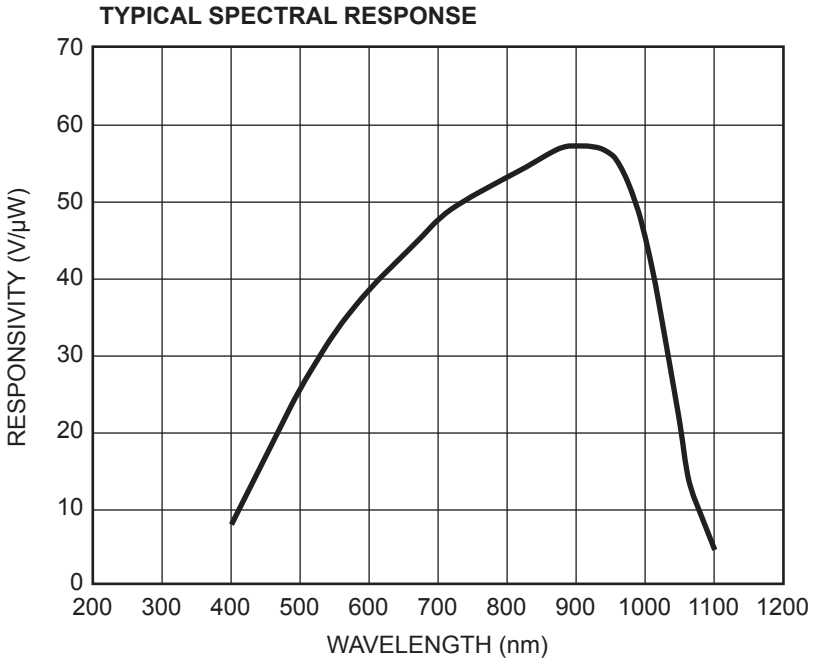

OPTO DIODE CORP.
750 Mitchell Road, Newbury Park, California 91320
Phone: (805) 499-0335, Fax: (805) 499-8108
Email: sales@optodiode.com, Website: www.optodiode.com